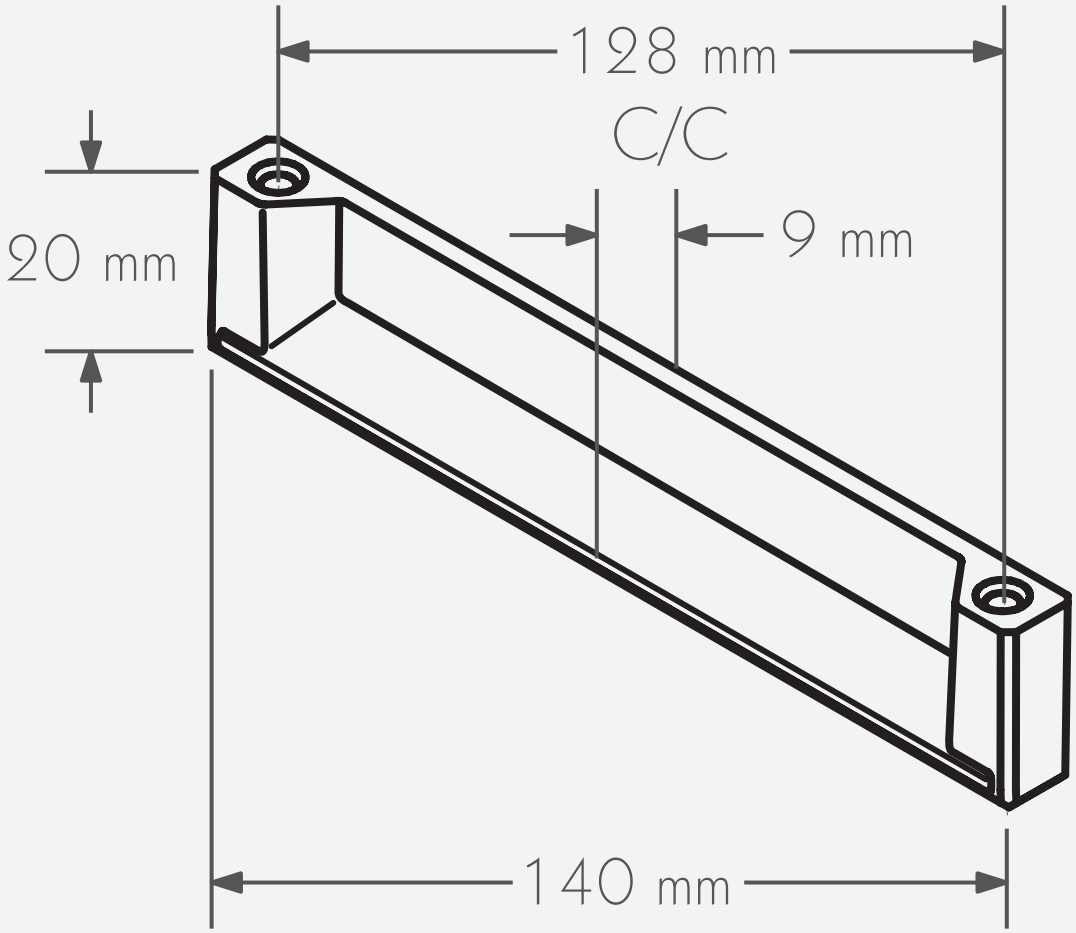

C/C:32mm; L:42mm
C/C:64mm; L:75mm
C/C:128mm; L:140mm
C/C:192mm; L:202mm