HAMPTON BRIDGE FAUCET / CROSS HANDLES / 2PC. SUITE

6350-2

- MAX COUNTER THICKNESS 2-3/8"
- MINIMUM INSTALL HOLE SIZE 1-3/8"

A. Side Spray Connection with 1/4" NPT Pipe Fitting

B. Supply Hoses - 20" Long with 3/8" Compression Fittings

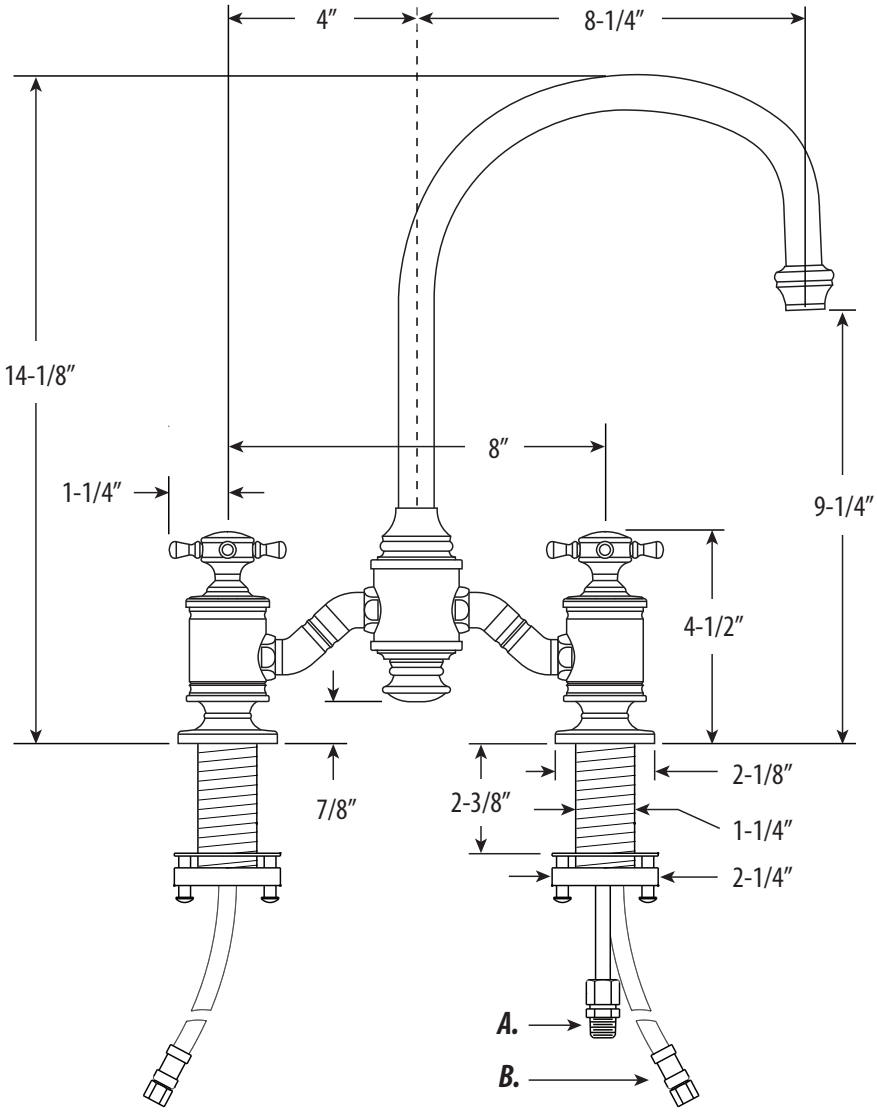

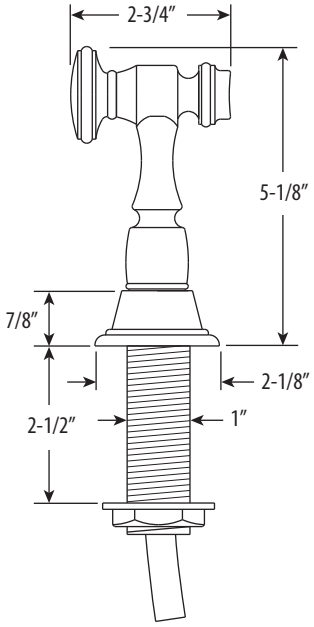

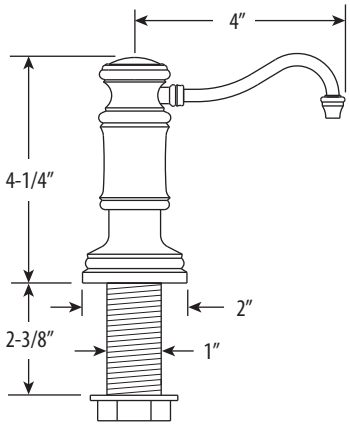

DIMENSIONS MAY VARY AND ARE SUBJECT TO CHANGE. NO RESPONSIBILITY IS ASSUMED FOR USE OF SUPERCEDED OR VOIDED DATA

ICC ES PMG

ICC ES PMG LOW LEAD

ECO BRASS HIGH PERFORMANCE LEAD FREE BRASS